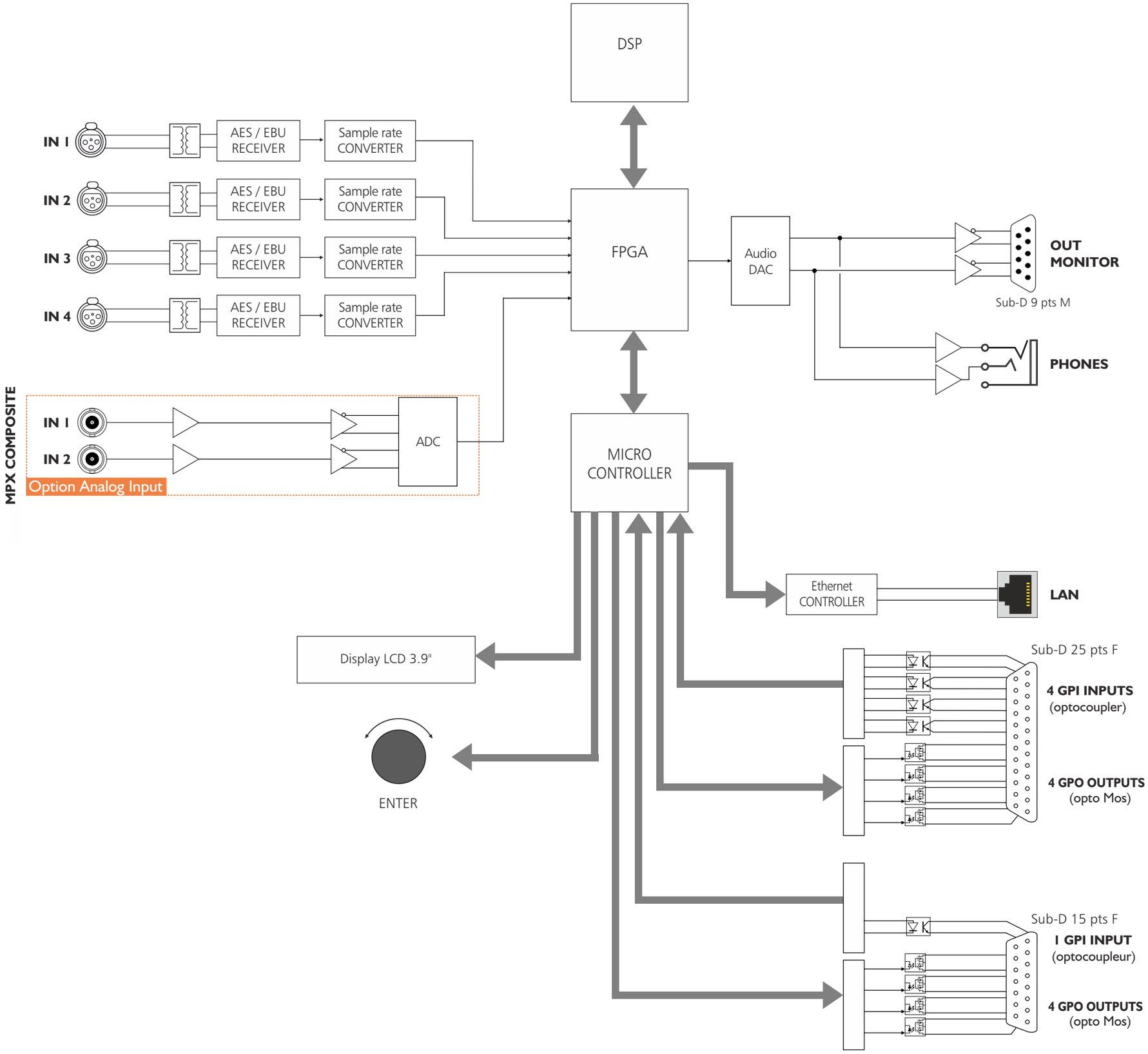
DSP
IN 1
IN 2
IN 3
IN 4
AES / EBU RECEIVER
Sample rate CONVERTER
FPGA
Audio DAC
OUT MONITOR
Sub-D 9 pts M
PHONES
MPX COMPOSITE
IN 1
IN 2
Option Analog Input
ADC
MICRO CONTROLLER
Ethernet CONTROLLER
LAN
Display LCD 3.9"
ENTER
Sub-D 25 pts F
4 GPI INPUTS
(optocoupler)
4 GPO OUTPUTS
(opto Mos)
Sub-D 15 pts F
1 GPI INPUT
(optocoupleur)
4 GPO OUTPUTS
(opto Mos)